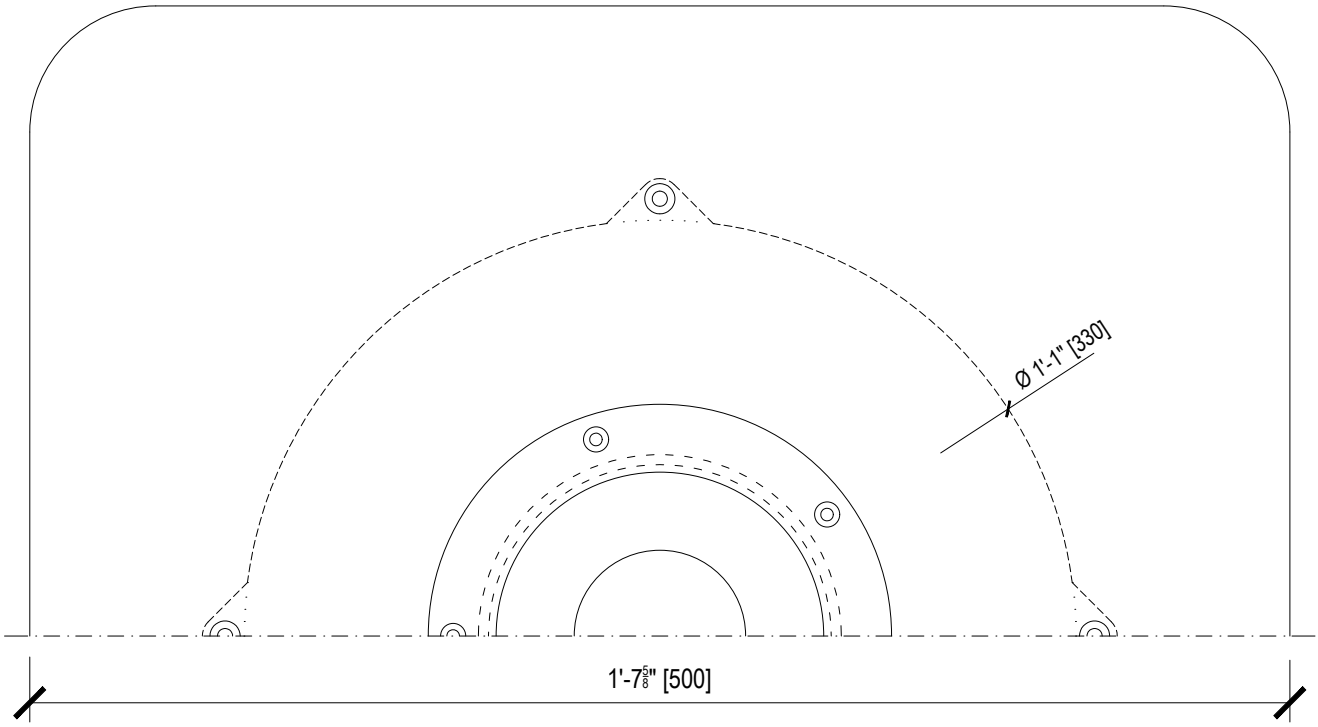


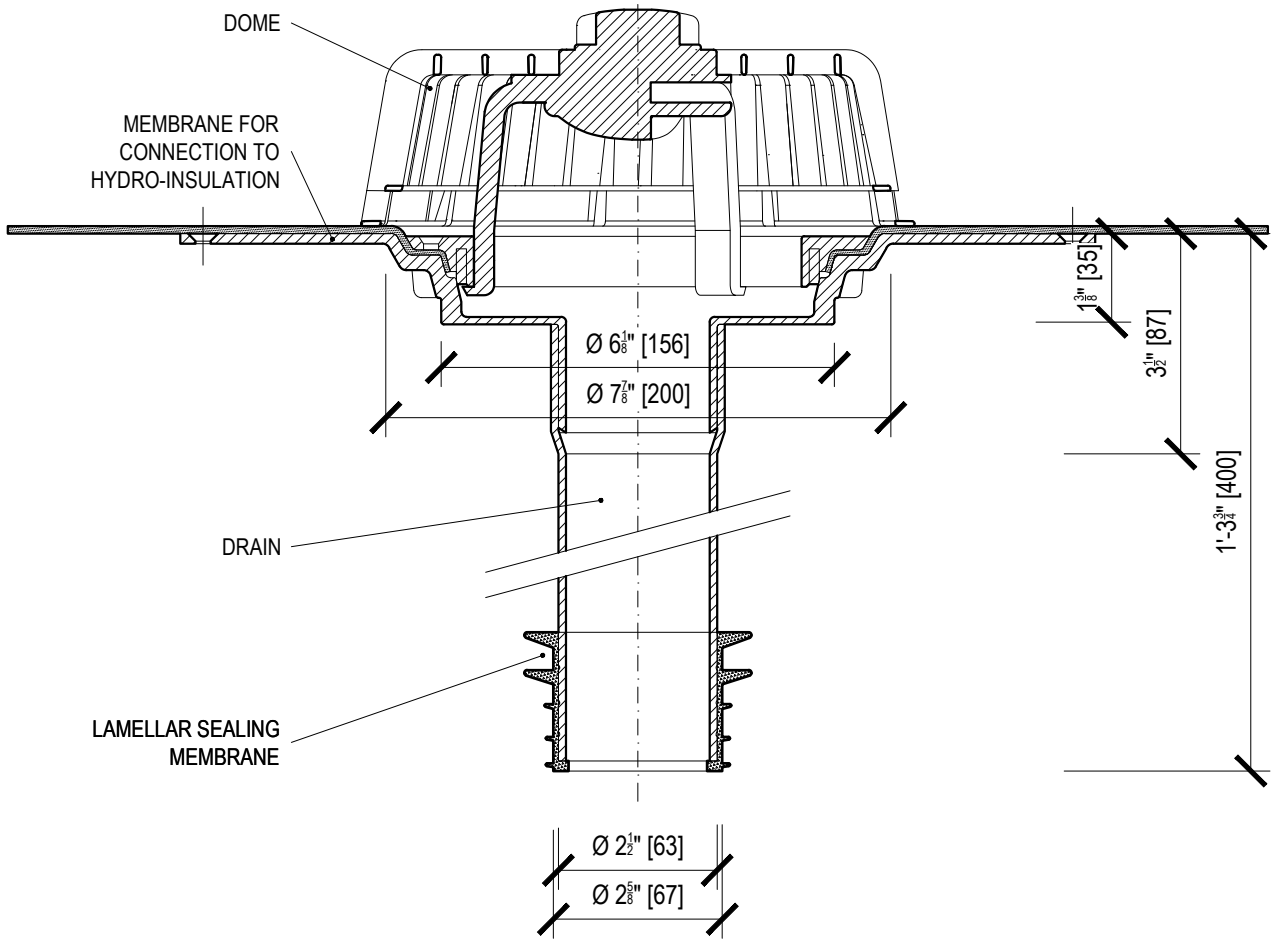


| | | | |
|---|---|---|---|
| Name | **RETRO DRAIN** | | |
| Type | **TW RETRO 3" BIT** | Weight | 5lb 8oz |
| Code | US15110063 | Material | POLYAMIDE |
| Scale | 1:3 | | |

TOPWET® | SYSTEMS FOR DRAINAGE OF FLAT ROOFS

info@topwet.cz www.topwet.com