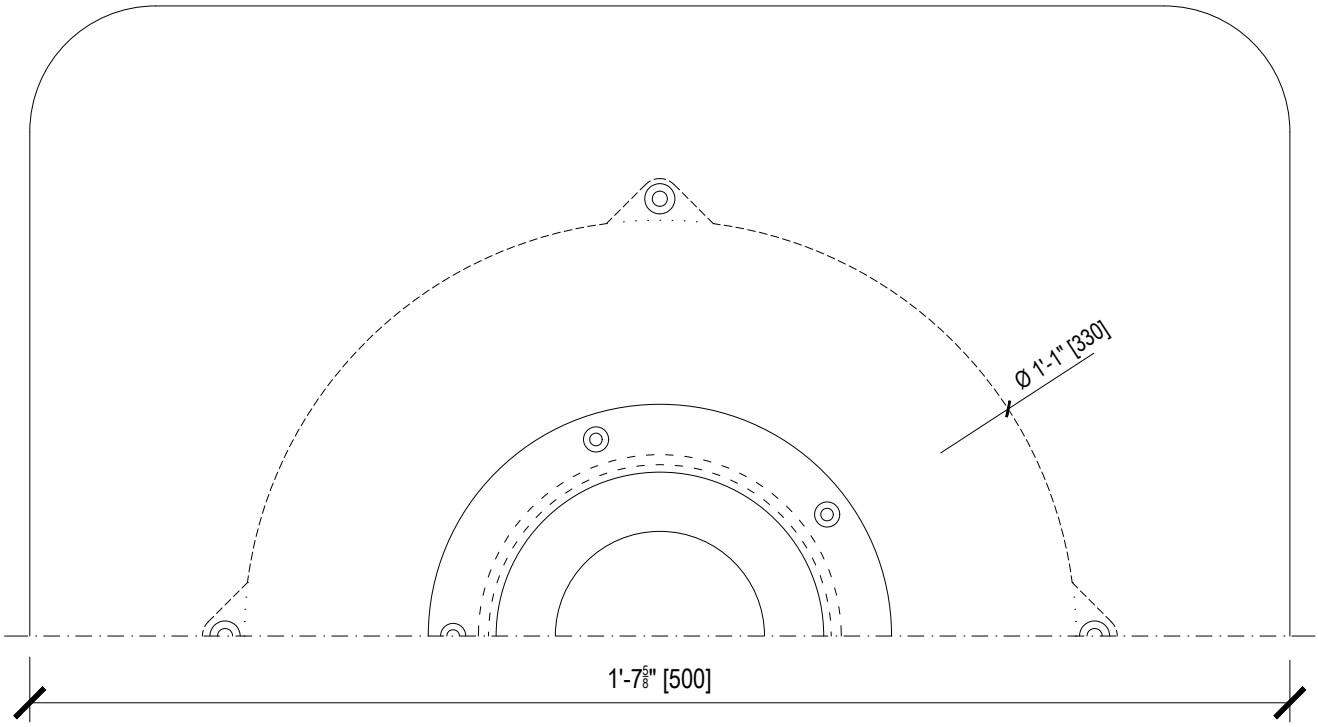

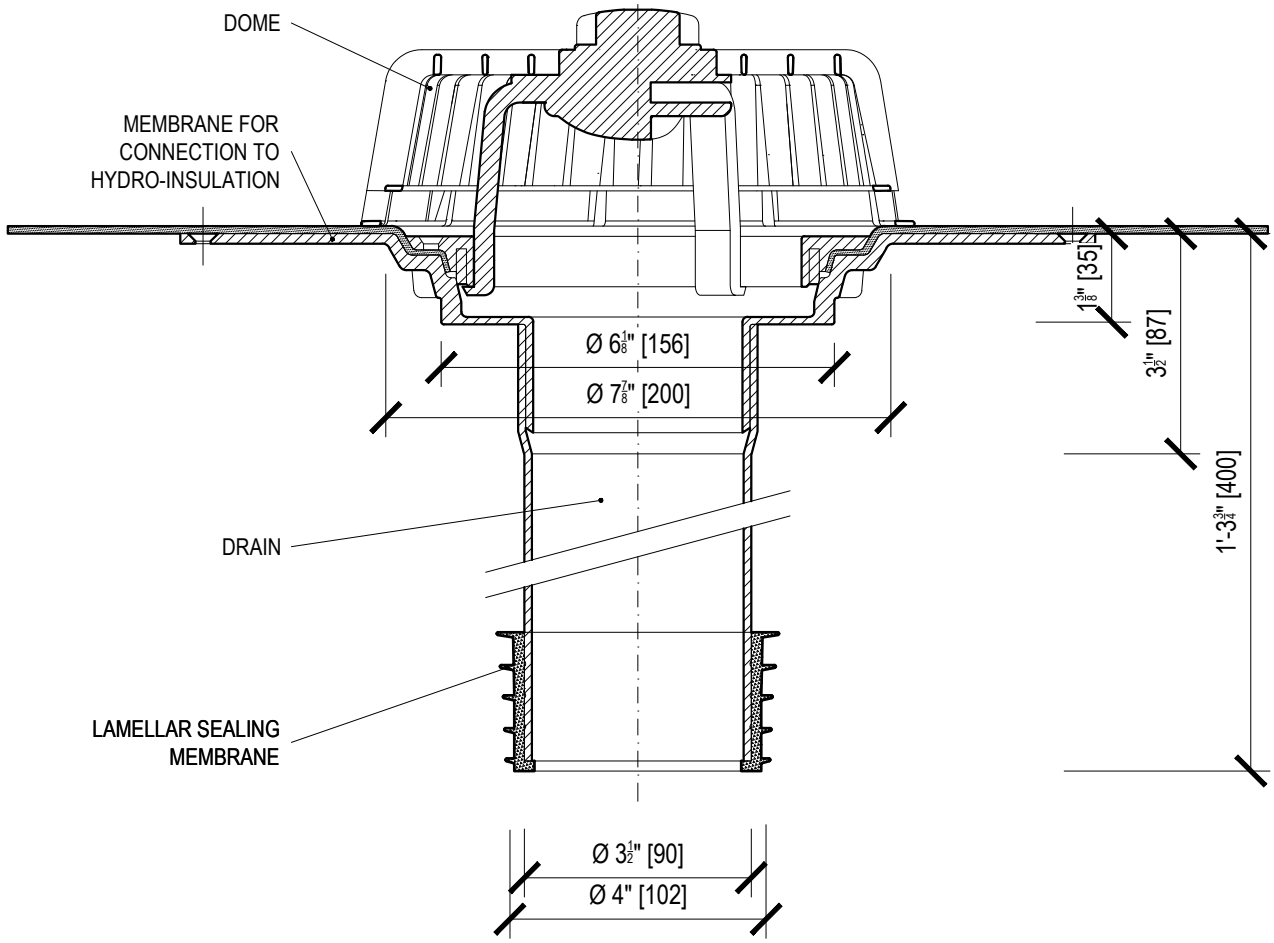

Name	**RETRO DRAIN**		
Type	**TW RETRO 4" ___**	Weight	5lb 15oz
Code	US15810090	Material	POLYAMIDE
Scale	1:3		

TOPWET® | SYSTEMS FOR DRAINAGE OF FLAT ROOFS

info@topwet.cz www.topwet.com